NOTE:
Surmountable Curb & Gutter to be formed into a B618 type at catchbasin.

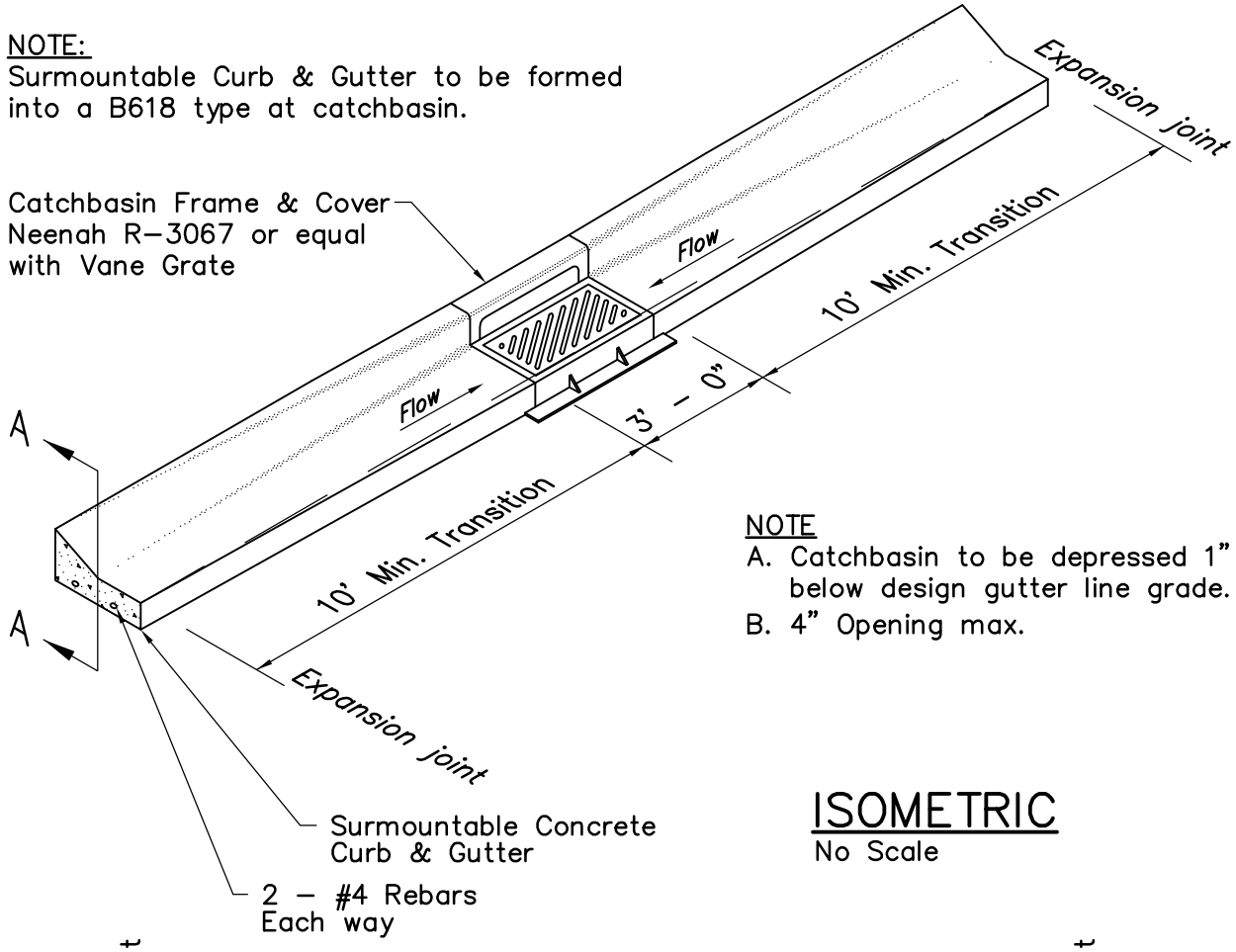

NOTE
A. Catchbasin to be depressed 1" below design gutter line grade.
B. 4" Opening max.

ISOMETRIC
No Scale

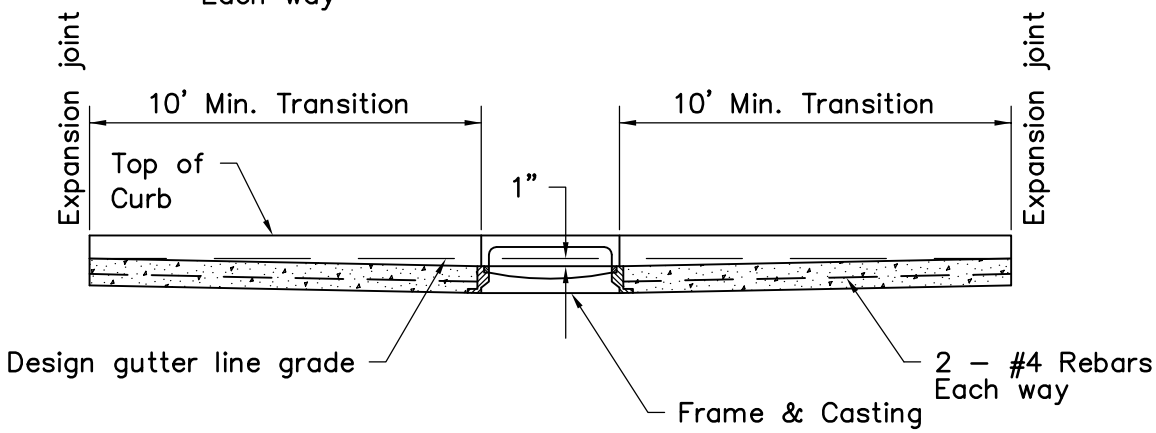

SECTION A-A
No Scale

Bonestroo

STANDARD DETAILS
SURMOUNTABLE CURB & GUTTER
CONSTRUCTION AT CATCHBASIN

City of Cottage Grove Minnesota

Last Revision: June 2005

COTTAGE GROVE, MINNESOTA

City Plate No. STR-3

48_STR3.DWG