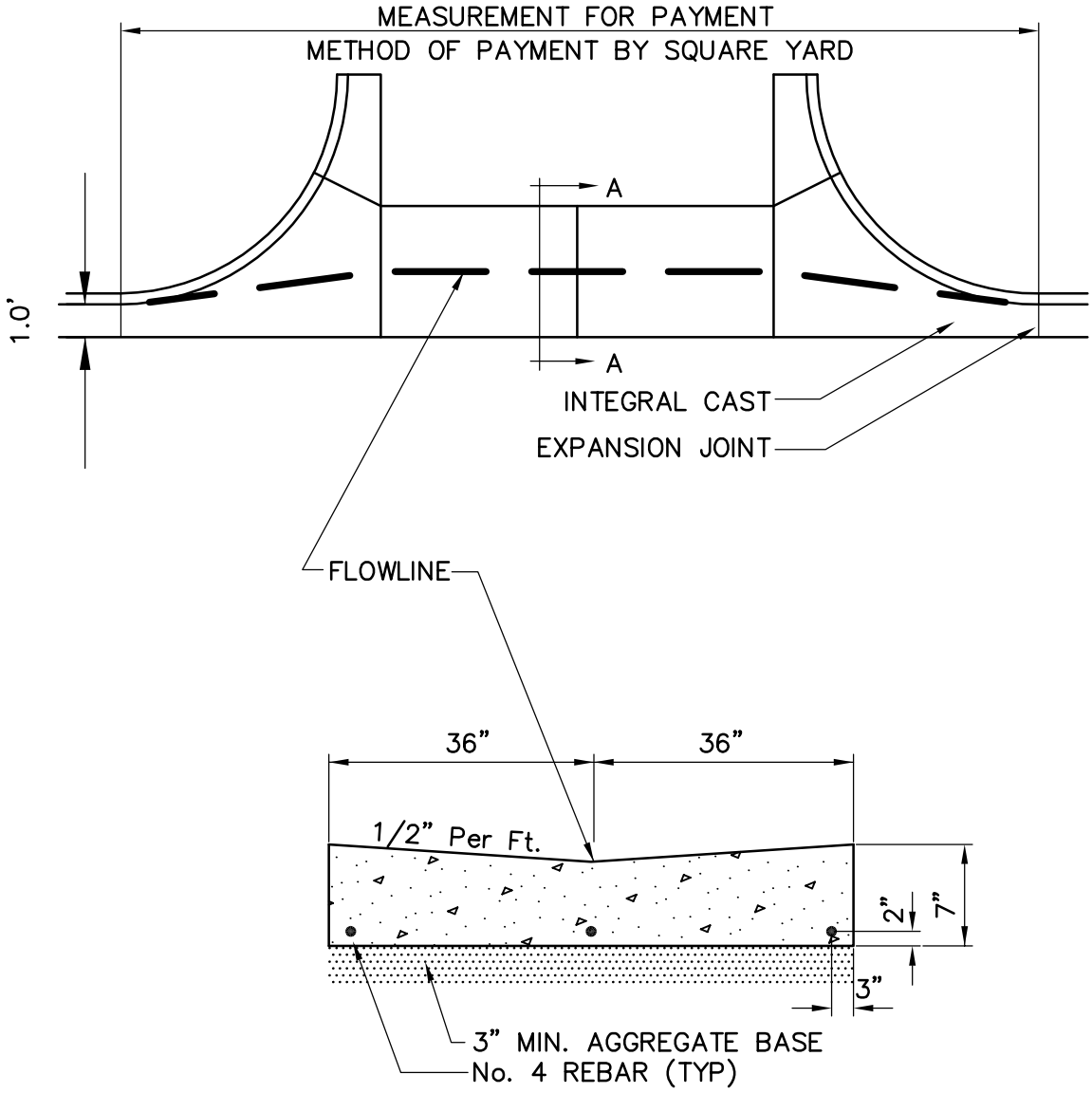

SECTION A–A

THRU CONCRETE GUTTER

Bonestroo

STANDARD DETAILS

CONCRETE VALLEY GUTTER
RESIDENTIAL UNIT

City of Cottage Grove Minnesota

Last Revision: June 2005

COTTAGE GROVE, MINNESOTA

City Plate No. STR–9

48_STR9.DWG